DRAWING NO.
SU1758-38

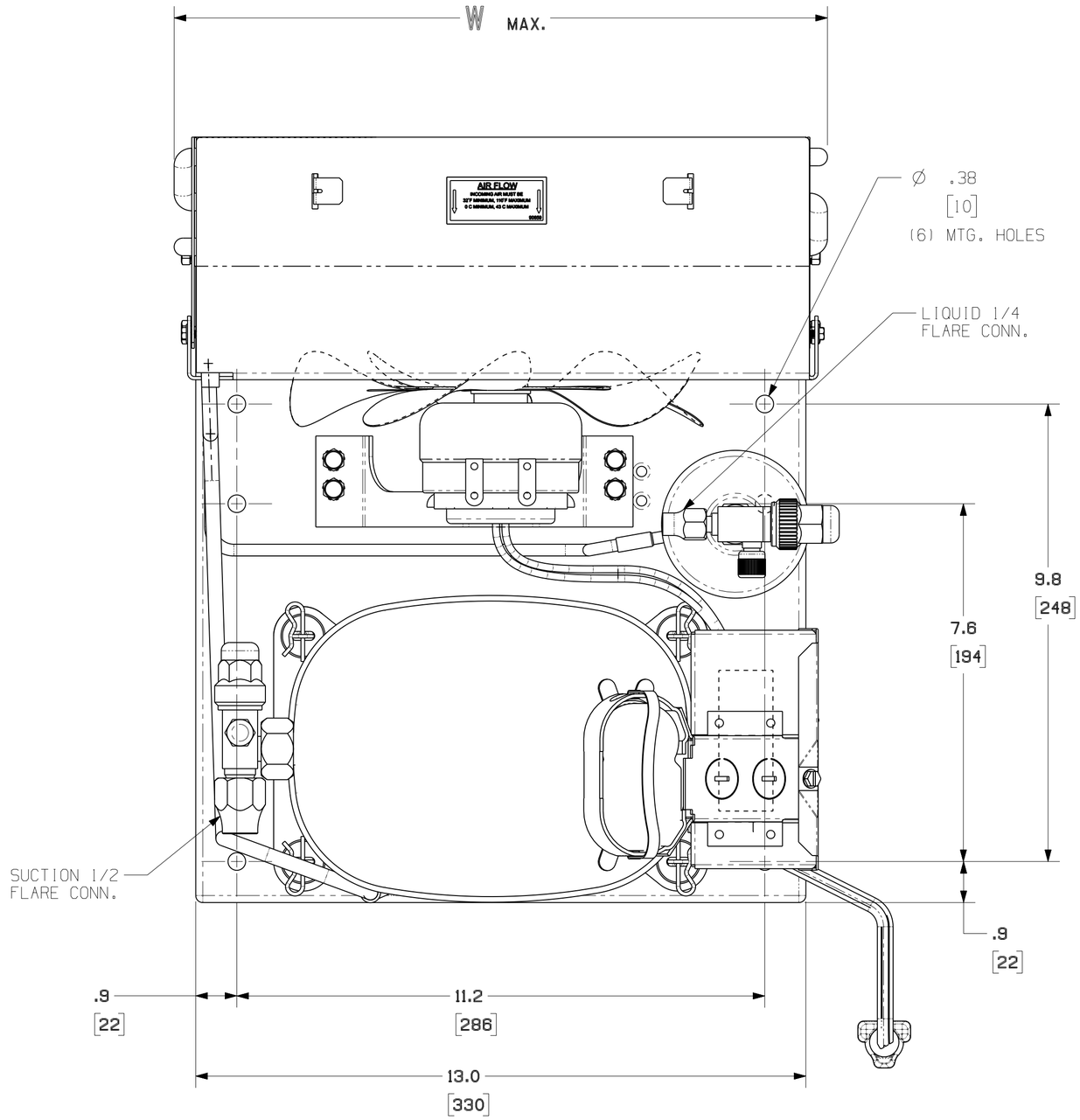


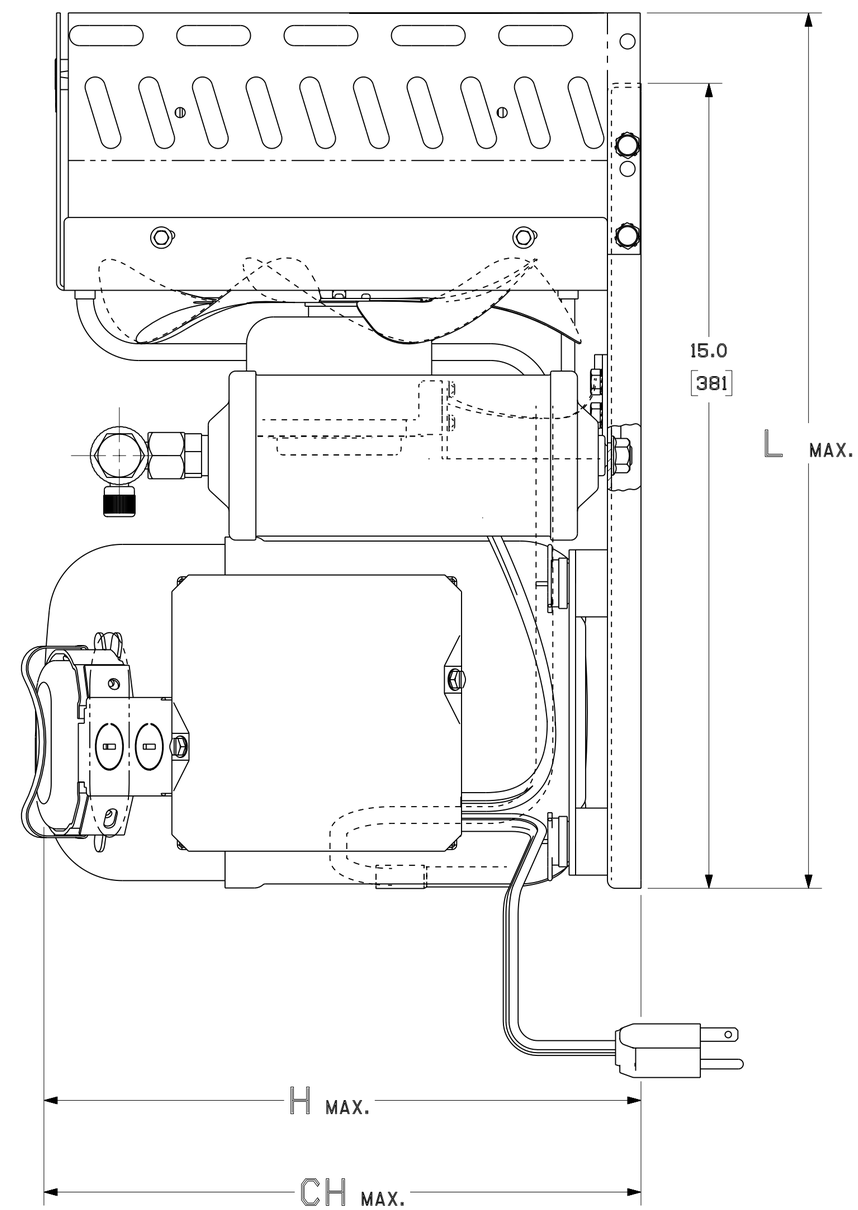


NOTE:

DIMENSIONING = INCHES ( MILLIMETERS )

3D,VNX4

| O.A. SYMBOLS |
|---|
| ✱ = CATEGORY I |
| ▲ = CATEGORY II |
| ■ = CATEGORY III |
| = CATEGORY IV |

AJ

| L | W | H | CH |
|---|---|---|---|
| 16.3 [414] | 13.9 [354] | 12.0 [304] | 12.0 [304] |

| REL | LT | LC | CHANGE | DATE |
|---|---|---|---|---|
| F | -- | | EC20849 REDRAWN IN 3D NO CHANGE | TS 11SEP08 |
| E | -- | | #239599-003 CHANGED TO MATCH DGU | LUCAS 27JUN01 |
| D | -- | | #239599-003 CHANGED FROM V-9 TO V-16 | |
| C | -- | | #232180-042 CHG'D REC. TANK & LIQUID LINE | W.E.M. 18AU095 |
| B | -- | | #231519-002 REVISED TEXT SIZE & COLOR | R.E.S. 16FEB95 |
| A | -- | | EC#229952-1 REVISED FAN CORD SLACK TAKE UP | W.E.M. 18NOV94 |
| - | | | #22492 | ---- |

THIS DRAWING OR PRINT IS THE PROPERTY OF TECUMSEH PRODUCTS COMPANY (TECUMSEH) AND CONTAINS INFORMATION BELONGING TO TECUMSEH. IT IS MADE AVAILABLE TO THE RECIPIENT ON THE CONDITION THAT NEITHER IT SPECIFIC CONDITION THAT NEITHER IT THEREON OR DISCLOSED OTHERWISE SHALL BE DISCLOSED OR MADE AVAILABLE TO OTHERS WITHOUT THE WRITTEN CONSENT OF SPECIFIC WRITTEN CONSENT OF TECUMSEH, NOR SHALL IT BE USED FOR ANY PURPOSE NOT EXPRESSLY AUTHORIZED BY TECUMSEH. APPROVED IN WRITING BY TECUMSEH. AND NOT TO BE REPRODUCED IN WHOLE OR IN PART WITHOUT TECUMSEH'S PRIOR EXPRESS WRITTEN CONSENT AND IN ACCORDANCE WITH SUCH CONSENT THEREOF TO TECUMSEH AT THE RECIPIENT SUCH REQUEST MODIFY AFTER SUCH RELEASE.

DIS.CODE: SU

NAME: HERMETIC CONDENSING UNIT

| DWN. | CK. | APR. | SCALE |
|---|---|---|---|
| A.S.C. 20FEB92 | HOWELL 8-22-95 | BLANDEN | 1":2" |

THIS PRINT SUPERSEDES ALL PRINTS PRIOR TO

DO NOT SCALE THIS DRAWING ALL FERROUS MATERIALS MUST BE MAGNETIZED AS RECEIVED OR AT COMPRESSOR ASSEMBLY.

TECUMSEH COMPRESSOR CO.
TECUMSEH, MICHIGAN

MATERIAL: NOTED

DRAWING NO. SU1758-38

BANNER